BRIZZONTI®
AGRICULTURAL INNOVATION

MADE IN ITALY

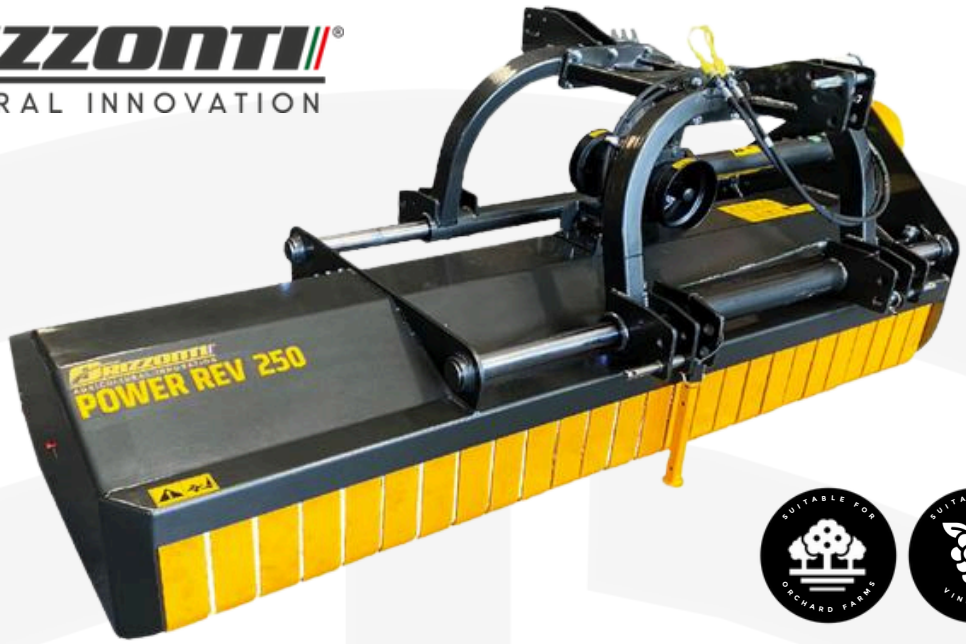

MULCHER POWER REV

POWER REV the name says it all. The ultimate cutter with dual work mode (front and/or rear), featuring a robust double-frame design with a three-point hitch, built to handle heavy impacts. The double-reinforced sheeting absorbs shocks, while the liquid paint finish enhances durability. It also includes an adjustable rear roller for optimal working height. Last but certainly not least, it comes with a reliable transmission, using a gearbox with dual PTO (front and rear), a free internal wheel, and toothed belts with 3 to 5 elements, depending on the machine's length.

- **Double case structure with internal HARDOX sheet**
- **Sheet thickness: 10 mm (5 + 5 mm)**
- **Double three-point CAT attachments: 1-2 for mounting on both front and rear lifts**
- **Chromed rods Ø60 for smooth, balanced sliding of connections**
- **Transmission for front PTO (1000 rpm) and rear PTO (540 rpm), in both standard and reversible versions**
- **Rotor with hammers and screws Ø20 mm**
- **Mechanical movement, hydraulic option available on request**

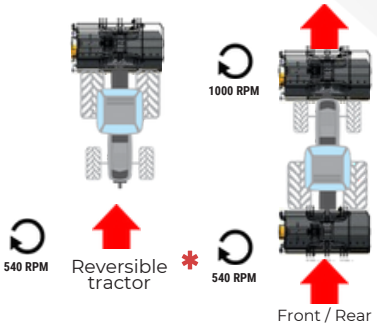

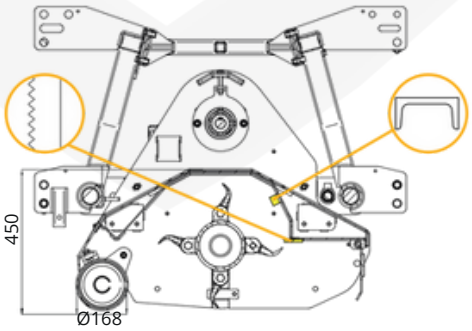

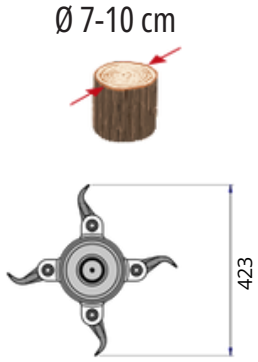

POWER REV
MADE WITH **HARDOX**

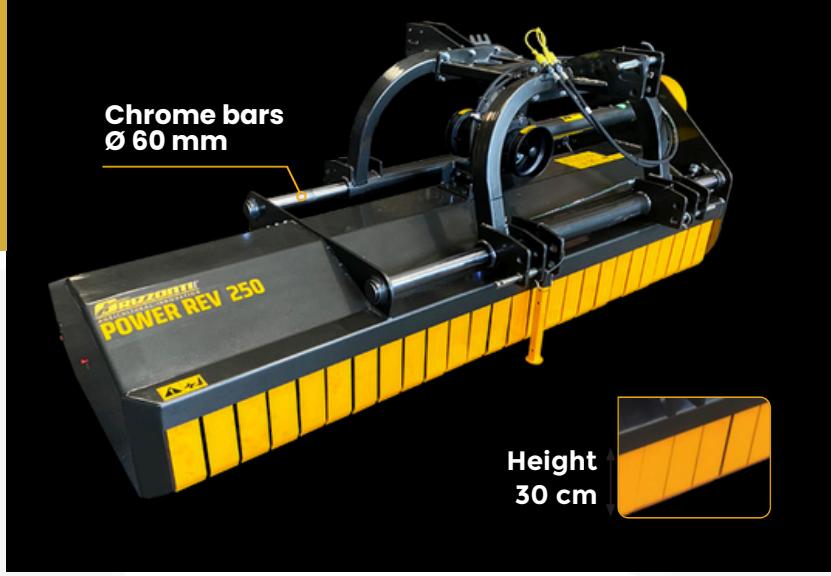

FIND YOUR PERFECT MODEL

Explore our range of Power Rev Mulchers, tailored to meet your unique requirements. From compact orchards to expansive vineyards, we offer the ideal model to boost efficiency and ensure top performance on your land.

MODEL									Kg
POWER REV 145	40/80 hp 29/57 Kw	12	24+12	9	■ 70-75 cm ■ 41-104cm	3	540/1000155x130h 50cm		755
POWER REV 160	40/80 hp 29/57 Kw	16	28+14	10	■ 69-91cm ■ 41-119cm	4	540/1000175x130h 50cm		790
POWER REV 180	50/80 hp 36/57 Kw	16	32+16	11	■ 89-91cm ■ 41-139cm	4	540/1000195x130h 50cm		820
POWER REV 200	60/80 hp 43/57 Kw	20	40+20	12	■ 92-108cm ■ 42-158cm	4	540/1000215x130h 50 cm		875
POWER REV 225	60/100hp 43/71 Kw	20	40+20	14	■ 91-134cm ■ 41-184cm	4	540/1000240x130h 50 cm		955
POWER REV 250	80/100 hp 52/72 Kw	24	40+20	12	■ 119-131cm ■ 50-200cm	4	540/1000265x130h 50 cm		1050

OPTIONAL

Reverse pulleys for 1000 RPM	1000 RPM
P.T.O. drive shaft category 6 - L = 90 cm	Need for reversing pulleys
Skids adjustable in height	
Collectings rakes (each)	
Front wheels Ø 22 cm adjustable in height	Ø 20 mm 1.6 Kg
Levelling roller Ø 19,4 cm (included with POWER 250)	
Gearbox for reversible drive tractor	Ø 20 mm

***Tractor Culture reserves the right to adjust pricing based on exchange rate, & shipping cost.**

TractorCulture